NOTE:
1. TRANSFORMER IS FREESTANDING IN ENCLOSURE
2. METAL GAUGE TO CSA–C22 No. 94–M91
3. PAINT ASA # 61 GRAY
4. BOLTED, KNOCK DOWN CONSTRUCTION
5. OPEN BOTTOM
6. COVERED OPENING FOR ACCESS TO LIFTING POINTS

CSA TYPE 1 (NEMA 1)
INDOOR USE

APPROX. WEIGHT:

CORE & COIL:	27800 LBS
ENCLOSURE:	2800 LBS
TOTAL:	30600 LBS

TRANSFORMER:

KVA:	4500
PRIMARY VOLTAGE CLASS:	**34.5 KV**
PRIMARY VOLTAGE:	☐ 34500 VOLTS DELTA* OR ☐ 27600 VOLTS DELTA* OR ☐ OTHER _____
PRIMARY TAPS:	2x2.5% FCAN, 2x2.5% FCBN
SECONDARY VOLTAGE:	☐ 600Y/347 VOLTS OR ☐ 480Y/277 VOLTS OR ☐ OTHER
PRIMARY B.I.L.:	**150 KV**
SECONDARY BIL:	10 KV
INSULATION CLASS:	220°C
TEMPERATURE RISE:	150°C
IMPEDANCE:	STANDARD
SOUND LEVEL:	STANDARD
WINDING MATERIAL:	☐ COPPER OR ☐ ALUMINUM
TERMINAL MATERIAL:	☐ COPPER OR ☐ ALUMINUM
STANDARD FEATURES:	ANTI–VIBRATION PADS

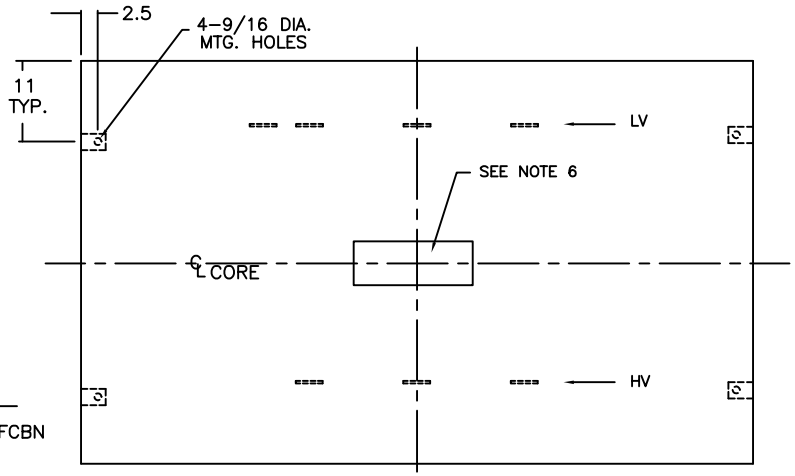

PLAN VIEW

① NAME PLATE

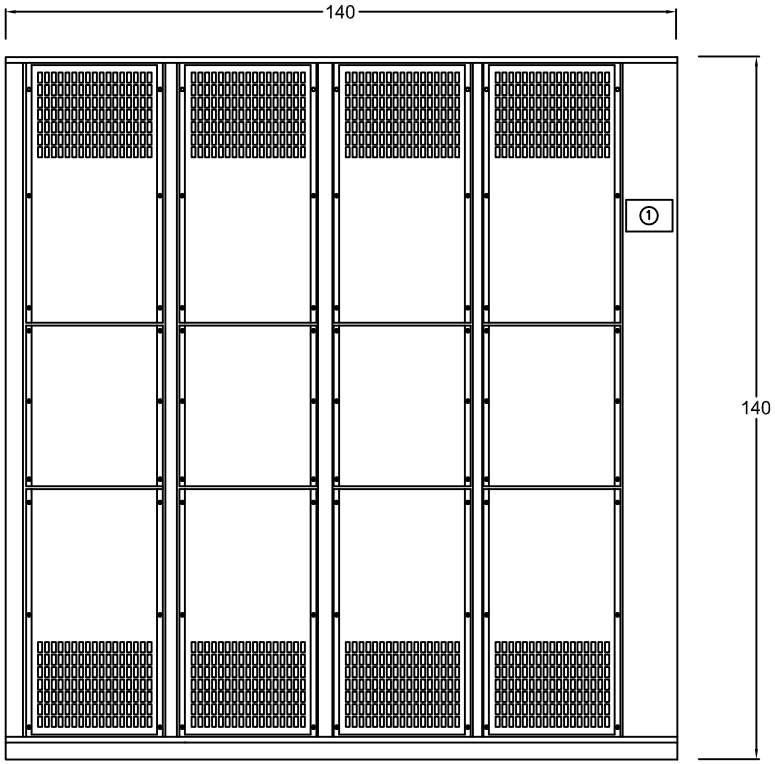

FRONT VIEW

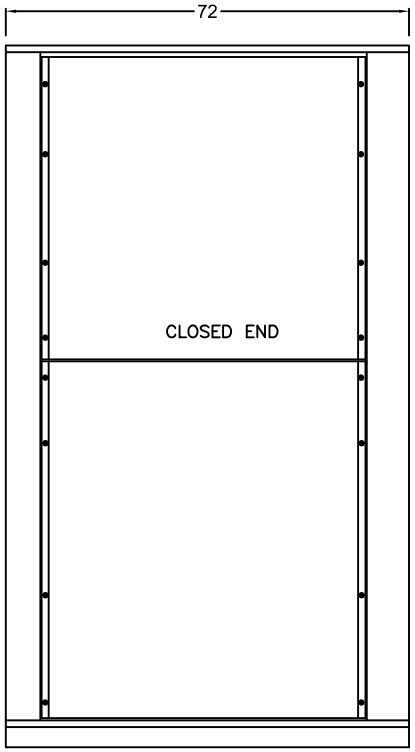

END VIEW

VECTOR DIAGRAM

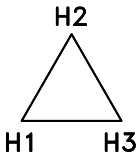

PRIMARY

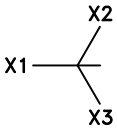

SECONDARY

Note: *Dimensions may change if units are co-ordinated with switchgear.*
Dimensions are estimates. For firm dimensions contact factory.
**For Y-Y connection consult factory for dimensions*

REV.	REMARKS	BY	DATE

REX POWER MAGNETICS
DIVISION OF TRANSFACTOR INDUSTRIES INC.

SCALE: N.T.S.	DRAWN BY: SARKIS	DATE: JUNE 8,10	REV.: 0
JOB:	CHECKED BY: DMM	DATE: JUNE 8,10	SWO#:

TITLE: 4500KVA 34.5KV CLASS ENCLOSURE OUTLINE NEMA–1

DRAWING No. 4500KVA–BIL150–1